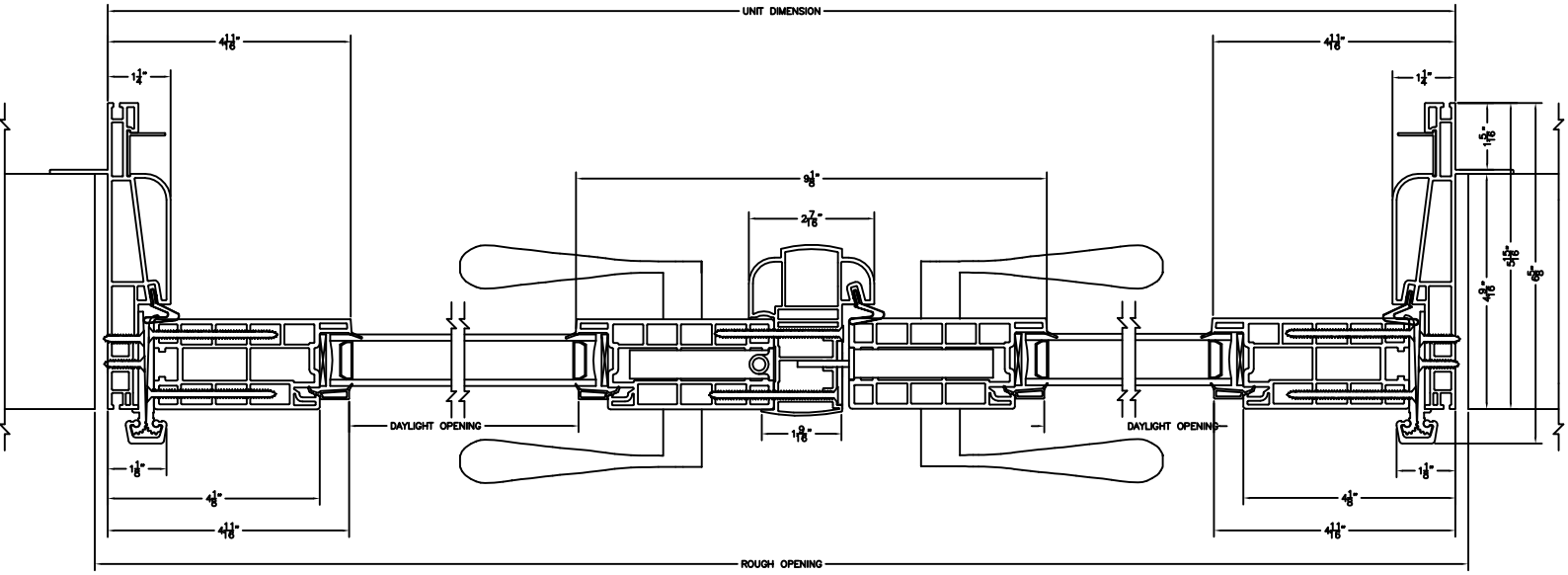


BOTANICA GARDEN FRENCH DOOR - HORIZONTAL SECTION
SCALE: NOT TO SCALE

TIMELINE VINYL WINDOWS & DOORS
701 N. STATE ST. Merrill, WI 54452 (715) 536-2461